Estimation of vector uncertainties of multivariable indirect instrumental measurement systems on the star circuit example

Zygmunt Warsza[1], **Jacek Puchalski** [2]
[1] Industrial Research Institute of Automation and Measurements (PIAP), Warszawa, Poland
[2] Central Office of Measures (GUM), Warszawa, Poland
E-mail: zlw1936@gmail.pl, jacek.puchalski@gum.gov.pl

Abstract. Signal processing in a multi-variable indirect measurement system and its uncertainties is considered. It was proposed to extend the vector method of estimating uncertainties, given in Supplement 2 to GUM for the use to describe the accuracy of instrumental systems for indirect multivariable measurements. A formula for the covariance matrix of relative uncertainties is also given. As the example, the covariance matrix for indirect measurements of the star form circuit resistances from its terminals was determined and influence of of the measurement channels uncertainties are analyzed.

1. Introduction

Many physical quantities or parameters must be measured indirectly, i.e. other measurands should be measured on inputs and from them the tested quantities (observables) on output should be determined. The set of such jointed variables is the multivariate or vector measurand. The flow chart of the indirect multi-variable instrumental measurement system is on Fig.1.

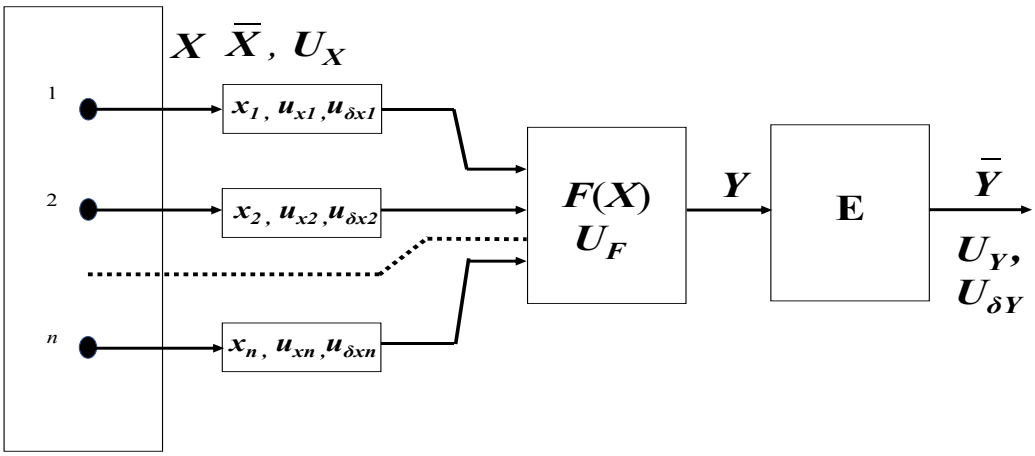

Fig. 1. Signal processing in multi-variable indirect measurement system

Main relation and parameters of this system:

$$\boldsymbol{y} = \boldsymbol{F}(\boldsymbol{x}) \tag{1}$$

$\boldsymbol{x} = [x_1, x_2, \ldots x_n]$; $\boldsymbol{y} = [y_1, y_2, \ldots y_m]$ – vectors of input x_i and output y_i signals; $\bar{\boldsymbol{x}}$, $\bar{\boldsymbol{y}}$, $\boldsymbol{u_x}$, $\boldsymbol{u_{\delta x}}$, $\boldsymbol{u_y}$, $\boldsymbol{u_{\delta y}}$ – vectors of estimators of input $\boldsymbol{x}$ and output $\boldsymbol{y}$ signals and of its standard absolute and relative uncertainties; $\boldsymbol{U_X}$, $\boldsymbol{U_Y}$, $\boldsymbol{U_{\delta X}}$, $\boldsymbol{U_{\delta Y}}$ – their covariance matrixes, $\boldsymbol{F(x)}$, $\boldsymbol{u_F}$, $\boldsymbol{u_{\delta F}}$, $\boldsymbol{U_F}$, $\boldsymbol{U_{\delta F}}$ – functional of processing x to y, its standard absolute and relative uncertainties and its covariance matrixes, **E** –processing unit of $\bar{\boldsymbol{Y}}$, $\boldsymbol{u_Y}$, $\boldsymbol{u_{\delta Y}}$.

The estimation of vector $\bar{\boldsymbol{y}}$ of results $\bar{y}_i$ and covariance matrix of their relative uncertainties $\boldsymbol{u_{\delta y}}$ is obtained by indirect measurements of m-dimensional signal $\boldsymbol{y}$, dependent on the functional $\boldsymbol{F}(\boldsymbol{x})$. All, or some components of the resulted vector $\bar{\boldsymbol{y}}$ can be used further separately or jointly. In the latter case it is necessary to take in considerations the correlations between the uncertainties of components y_i of the output multidimensional measurand $\boldsymbol{y}$.

2. Existing state.

The accuracy of each range of measurands of multivariable instrumental measurement system is now described by the maximal value (worth case) of limited absolute error $|\Delta_{y_i}|_{max}$.The absolute error of any output signal y_i has two components, i.e. Δ_{y_i}=$\Delta_{y_{i0}}$+$\Delta(y_i - y_{i0})$ and then the absolute error is

$$|\Delta_{y_i}| \leq |\Delta_{y_{i0}}| + y_i |\varepsilon_{S_i}| \quad \text{for } i = 1, \ldots m \tag{1}$$

where: $\Delta_{y_{i0}}$ - absolute error of initial value y_{i0} of the range, $\varepsilon_{S_i} \equiv \Delta(y_i - y_{i0})/y_i$ - relative error of the difference $(y_i - y_{i0})$.

If $|\Delta_{y_{i0}}| \ll |\Delta(y_i - y_{i0})|$, then the relative limited error (worth case) of the component y_i of vector $\boldsymbol{Y}$ is

$$|\Delta_{y_i}/y_i|_{max} \cong |\varepsilon_{S_i}|_{max} \tag{2}$$

The recommendations for application of the method of determination of estimators of both vectors $\boldsymbol{X}$ and $\boldsymbol{Y}$ and of their covariance matrixes are described in Supplement 2 to the GUM [1]. This method of estimation of standard uncertainties of the set of single values y_i of indirectly measured components (observables) of output vector $\boldsymbol{Y}$ use the formula

$$\boldsymbol{U_Y} = \boldsymbol{S} \cdot \boldsymbol{U_X} \cdot \boldsymbol{S}^{\mathrm{T}} \tag{3}$$

Where: $\boldsymbol{S}_{m \times n}$ - matrix of sensitivity for vector of absolute standard uncertainties $\sigma_i \equiv u_i$, and

$\boldsymbol{U_X}$, $\boldsymbol{U_Y}$ - covariance matrixes of n variables in input and m variables in output.

3. What is needed

The randomized description of the accuracy for the whole ranges of values of input and output signals of multi-variable measurement system, which is made both by standard and expanded uncertainties, absolute u, U and relative u_r, U_r, for given P probability of the confidence level [1]. For $P = 0.95$, $u_i \approx 0.95\ |\Delta_{y_i}|$ [5]. Moreover, similarly as in (2), the relative uncertainties of every input quantities of measurement systems can be estimated by single values $\delta_{y_i} \cong \delta_{S_{y_i}}$, which remains unchanged in almost whole measuring range.

We find that for the multiplicative type of main measurement equations the relation of covariance matrixes of relative uncertainties δ_{y_i}, δ_{x_i} (marked as u_r in GUM) has the similar form as (3), i.e.

$$\boldsymbol{U_{\delta Y}} = \boldsymbol{S_\delta}\, \boldsymbol{U_{\delta X}}\, \boldsymbol{S_\delta^{\mathrm{T}}} \tag{4}$$

$$\text{where } \boldsymbol{S_\delta} = \begin{bmatrix} \frac{x_1}{y_1}\frac{\partial y_1}{\partial x_1} & \cdots & \frac{x_n}{y_1}\frac{\partial y_1}{\partial x_n} \\ \cdots & \cdots & \cdots \\ \frac{x_1}{y_m}\frac{\partial y_m}{\partial x_1} & \cdots & \frac{x_n}{y_m}\frac{\partial y_m}{\partial x_n} \end{bmatrix}, \qquad \boldsymbol{U_{\delta X}} = \begin{bmatrix} \delta_{x_1}^2 & \cdots & \rho_{x_1 x_n}\delta_{x_1}\delta_{x_n} \\ \cdots & \cdots & \cdots \\ \rho_{x_1 x_n}\delta_{x_1}\delta_{x_n} & \cdots & \delta_{x_n}^2 \end{bmatrix} \tag{5}$$

The recommendations of Supplement 2 to the GUM [1] does not cover situations, when the functional $\boldsymbol{F}(\boldsymbol{x})$ is not accurate, e.g. due to approximation of transfer functions, limited frequency ranges and using in signal processing AC/DC converters, analogue multipliers, and other functional elements. Therefore $\boldsymbol{F}(\boldsymbol{x})$ is also saddled with uncertainties $\boldsymbol{u_{\delta F}}$. Even in the most precise measurements the rounding of results also becomes essential, including the one resulting from the precision of processing in digital circuits [2], [3]. All that will be clearer on the example of indirect measurement of three resistances of the star circuit from its terminals.

4. Indirect measurement of star circuit resistances

Three, inseparably connected in stair circuit resistances can be determined indirectly from three measurements of input resistances on pairs of terminals A, B, C. These values are transferring to the module of performance $\boldsymbol{F}$, in which finally the values of stair resistances are calculated.

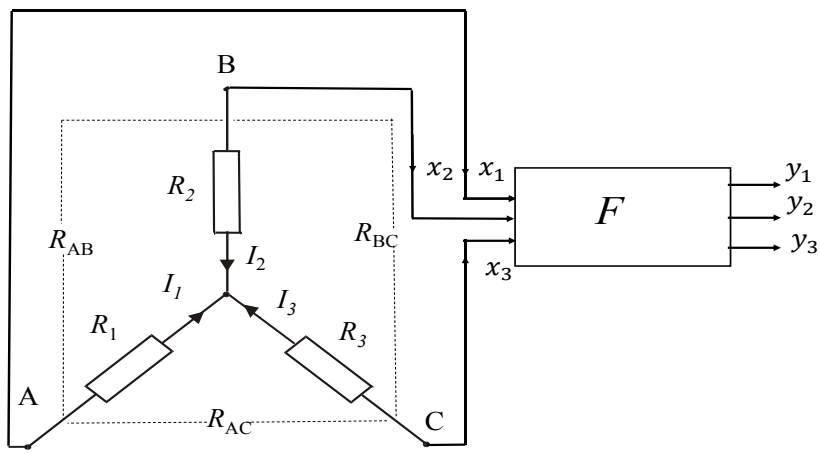

Fig. 2. The diagram of the star circuit with module of performance measurements

From measurement equations

$$R_{AC} = R_1 + R_3, \qquad R_{AB} = R_1 + R_2, \qquad R_{BC} = R_2 + R_3 \tag{6}$$

resistances R_1, R_2, R_3 have been carried out as

$$R_1 = \frac{R_{AB}}{2} - \frac{R_{BC}}{2} + \frac{R_{AC}}{2}; \qquad R_2 = \frac{R_{AB}}{2} + \frac{R_{BC}}{2} - \frac{R_{AC}}{2}; \qquad R_3 = -\frac{R_{AB}}{2} + \frac{R_{BC}}{2} + \frac{R_{AC}}{2} \tag{7}$$

Then correction has been implemented by delate the known systematic errors. The unknown errors have been randomized as components of the type B uncertainty u_B. Next the resultants of absolute standard uncertainties σ_{AB}, σ_{BC}, σ_{AC} are determined (as a square of quadratic values of components of uncertainty u_B, with use of the Jacobian matrix of sensitive coefficients:

$$\boldsymbol{S} = \begin{bmatrix} \partial R_1/\partial R_{AB} & \partial R_1/\partial R_{BC} & \partial R_1/\partial R_{AC} \\ \partial R_2/\partial R_{AB} & \partial R_2/\partial R_{BC} & \partial R_2/\partial R_{AC} \\ \partial R_3/\partial R_{AB} & \partial R_3/\partial R_{BC} & \partial R_3/\partial R_{AC} \end{bmatrix} = \frac{1}{2}\begin{bmatrix} 1 & -1 & 1 \\ 1 & 1 & -1 \\ -1 & 1 & 1 \end{bmatrix} \tag{8}$$

- **correlated variables in the input**

Let us consider the case when absolute uncertainties of input quantities σ_{AB}, σ_{BC}, σ_{AC} are correlated. Then in general the covariance matrix of input quantities has non-zero elements in non-diagonal positions. They are defined by correlation coefficients ρ_{AB}, ρ_{BC}, ρ_{AC}, i.e.:

$$\boldsymbol{U_x} = \begin{bmatrix} \sigma_{AB}^2 & \rho_{AB}\,\sigma_{AB}\,\sigma_{BC} & \rho_{BC}\sigma_{AB}\,\sigma_{AC} \\ \rho_{AB}\,\sigma_{AB}\,\sigma_{BC} & \sigma_{BC}^2 & \rho_{AC}\sigma_{BC}\sigma_{AC} \\ \rho_{BC}\sigma_{AB}\,\sigma_{AC} & \rho_{AC}\sigma_{BC}\sigma_{AC} & \sigma_{AC}^2 \end{bmatrix} \tag{9}$$

Also, the relative uncertainties δ_{AB}, δ_{BC}, δ_{AC} may be calculated. For the same relative uncertainties of the measurements $\delta_{AB}=\delta_{BC}=\delta_{AC}=\delta$, the absolute uncertainties of input quantities are: $\sigma_{AB} = \delta \cdot R_{AB}$, $\sigma_{AC} = \delta \cdot R_{AC}$ and $\sigma_{BC} = \delta \cdot R_{BC}$.

For the symmetric star resistances, i.e. when $R_{AB} = R_{BC} = R_{AC} = R$, absolute output uncertainties are

$$\sigma_{y1} = \frac{\delta R}{2}\sqrt{3 + 2(\rho_{BC} - \rho_{AB} - \rho_{AC})}, \quad \sigma_{y2} = \frac{\delta R}{2}\sqrt{3 + 2(\rho_{AB} - \rho_{BC} - \rho_{AC})}$$

$$\sigma_{y3} = \frac{\delta R}{2}\sqrt{3 + 2(\rho_{AC} - \rho_{AB} - \rho_{BC})}\,. \tag{10}$$

- **<u>non correlated variables in the input</u>**

The condition of non-correlated variables is $\rho_{AB} = \rho_{BC} = \rho_{AC} = 0$. Then the absolute uncertainties of output quantities and the correlations coefficients are described as follows

$$\sigma_{y_1} = \sigma_{y_2} = \sigma_{y_3} = \frac{1}{2}\sqrt{\sigma_{R_{AB}}^2 + \sigma_{R_{AC}}^2 + \sigma_{R_{BC}}^2}, \tag{11}$$

$$\rho_{y1y2} = \frac{\sigma_{AB}^2 - \sigma_{BC}^2 - \sigma_{AC}^2}{\sigma_{AB}^2 + \sigma_{BC}^2 + \sigma_{AC}^2}, \quad \rho_{y1y3} = \frac{-\sigma_{AB}^2 - \sigma_{BC}^2 + \sigma_{AC}^2}{\sigma_{AB}^2 + \sigma_{BC}^2 + \sigma_{AC}^2}, \quad \rho_{y2y3} = \frac{-\sigma_{AB}^2 + \sigma_{BC}^2 - \sigma_{AC}^2}{\sigma_{AB}^2 + \sigma_{BC}^2 + \sigma_{AC}^2}\,. \tag{12}$$

If $\sigma_{AB}=\sigma_{BC}=\sigma_{AC}=\sigma$ then $\sigma_{y1} = \sigma_{y2} = \sigma_{y3} = \frac{\sqrt{3}}{2}\sigma$, $\rho_{y1y2} = \rho_{y1y3} = \rho_{y2y3} = -\frac{1}{3}$.

Examples - summary of few solutions

- If $\sigma_{AB} = \sigma_{BC} = \sigma_{AC} = \sigma_{in}$, $\rho_{AB} = \rho_{BC} = \rho_{AC} = \rho_{in}$; $\sigma_{out} = \sigma_{y1} = \sigma_{y2} = \sigma_{y3} =$
  $= \frac{1}{2}\sigma_{in}\sqrt{3 - 2\rho_{in}}$; $\rho_{y1y2} = \rho_{y1y3} = \rho_{y2y3} = \frac{\rho_{in}-1}{3-2\rho_{in}}$; $\rho_{y1y2}, \rho_{y2y3}, \rho_{y1y3} \leq 0$.
- if $\rho_{in} = 0$; then $\sigma_{out} = \frac{\sqrt{3}}{2}\sigma_{in}$ and $\rho_{y1y2} = \rho_{y1y3} = \rho_{y2y3} = -\frac{1}{3}$;
  half of axes are: $1{,}4\sigma_{in}$, $2{,}8\,\sigma_{in}$, $2{,}8\,\sigma_{in}$
- if $\rho_{in} = 1$ then min $\sigma_{out} = \frac{1}{2}\sigma_{in}$, $\rho_{y1y2} = \rho_{y1y3} = \rho_{y2y3} = 0$; radius $1{,}4\,\sigma_{in}$
- if $\rho_{in} = -1$ then max $\sigma_{out} = \frac{\sqrt{5}}{2}\sigma_{in}$, $\rho_{y1y2} = \rho_{y1y3} = \rho_{y2y3} = -\frac{2}{5}$;
  half axes: $1{,}4\sigma_{in}$, $3{,}7\,\sigma_{in}$, $3{,}7\,\sigma_{in}$

5. The uncertainties u_F of processing circuit signals in measurement channels

The realization of performance is given by matrix equation:

$$\boldsymbol{Y} = \boldsymbol{F} \cdot \boldsymbol{X} \tag{13}$$

We are looking for uncertainty $\boldsymbol{u_F}$ which modified input signals during the analog/digital processing. Therefore, the functional matrix is also modified, and a new matrix is defined as:

$$\boldsymbol{F_S} = \frac{1}{2}\begin{bmatrix} k_1(1+\delta_1) & -k_2(1+\delta_1) & k_3(1+\delta_1) \\ k_1(1+\delta_2) & k_2(1+\delta_2) & -k_3(1+\delta_2) \\ -k_1(1+\delta_3) & k_2(1+\delta_3) & k_3(1+\delta_3) \end{bmatrix} \tag{14}$$

where $\sigma_1, \sigma_2, \sigma_3$ are coefficient dedicated to the measurend components of characteristic module of output quantities. The vector function of output quantities is additionally is perturbated by uncertainties associated with zero set errors ($\frac{\Delta_{10}}{1+\delta_1}$; $\frac{\Delta_{20}}{1+\delta_2}$; $\frac{\Delta_{30}}{1+\delta_3}$):

$$\sigma_{y_1} = (1+\delta_1)\sqrt{k_1^2\sigma_{x_1}^2 + k_2^2\sigma_{x_2}^2 + k_3^2\sigma_{x_3}^2 + 2\left(k_1k_3\,\rho_{x_1x_3}\sigma_{x_1}\sigma_{x_3} - k_1k_2\,\rho_{x_1x_2}\sigma_{x_1}\sigma_{x_2} - k_2k_3\,\rho_{x_2x_3}\sigma_{x_2}\sigma_{x_3}\right) + \sigma^2\left(\frac{\Delta_{10}}{1+\delta_1}\right)},$$

$$\sigma_{y_2} = (1+\delta_2)\sqrt{k_1^2\sigma_{x_1}^2 + k_2^2\sigma_{x_2}^2 + k_3^2\sigma_{x_3}^2 + 2\left(k_1k_2\,\rho_{x_1x_2}\sigma_{x_1}\sigma_{x_2} - k_1k_3\,\rho_{x_1x_3}\sigma_{x_1}\sigma_{x_3} - k_2k_3\,\rho_{x_2x_3}\sigma_{x_2}\sigma_{x_3}\right) + \sigma^2\left(\frac{\Delta_{20}}{1+\delta_2}\right)}, \tag{15}$$

$$\sigma_{y_3} = (1+\delta_3)\sqrt{k_1^2\sigma_{x_1}^2 + k_2^2\sigma_{x_2}^2 + k_3^2\sigma_{x_3}^2 + 2\left(k_2k_3\,\rho_{x_2x_3}\sigma_{x_2}\sigma_{x_3} - k_1k_2\,\rho_{x_1x_2}\sigma_{x_1}\sigma_{x_2} - k_1k_3\,\rho_{x_1x_3}\sigma_{x_1}\sigma_{x_3}\right) + \sigma^2\left(\frac{\Delta_{30}}{1+\delta_3}\right)}.$$

Then the characteristic equations for three-dimensional inverse of covariant matrix is given by

$$\lambda^3 - \varepsilon \cdot \lambda^2 + K \cdot \lambda - L = 0 \tag{16}$$

The valuable considerations about uncertainties of complex variables are in [6] and [7].

Several other examples of determining the uncertainties in case of multi-parameter linear and nonlinear formulas had been presented in the poster on IMEKO Congress Belfast 2018. For example, measurements of parallel RC circuit by Wien bridge, and for the transformation of RC circuit from parallel to the equivalent serial connection. The covariance matrix of relative uncertainties is also applied. The coverage region in the three-dimensional case and analytical formulas for half-axes of the ellipsoidal cover region are also given for considered examples.

Summary and Conclusion

The description accuracy of multivariate measurement instruments and systems by relative uncertainties and corresponding covariance matrixes can be the more effective as random approach then limited errors applied up to now classically.

If for example two or more parameters of the electrical element or disconnected circuit are measured indirectly together, then uncertainties of above parameters can be correlated. So, if such elements may be used together in new circuits, then obtained in measurements correlations coefficients and uncertainties should be considered in accuracy estimations of these circuits.

Literature

[1] JCGM 102:2011, Evaluation of measurement data – Supplement 2 to the Guide to the expression of uncertainty in measurement"– Extension to any number of output quantities.

[2] Warsza, Z.L.: Evaluation and numerical presentation of the results of indirect multivariate measurements … In: AMCTM IX monograph, ed. by Franco Pavese et all, Series on Advances in Mathematics for Applied Sciences, vol. 84, World Scientific 2012, Singapore p.418-425

[3] Warsza Z.L.: *About evaluation of multivariate measurements results.* JAMRIS (Journal of Automation, Mobile Robotics & Intelligent Systems, ed. by PIAP) vol. 6, no 4 2012, p. 27 -32

[4] Willink, R., Hall, B. D. (2002). A classical method for uncertainty analysis with multidimensional data. *Metrologia*, 39, 361–369.

[5] Warsza Z. L.: Methods of Extension of the Measurement Uncertainty Analysis. Monograph. PIAP Warszawa 2016 (in Polish)

[6] Hall, B. D. (2016). Evaluating the measurement uncertainty of complex quantities: a selective review. *Metrologia*, 53, 25 –31

[7] Ramos, P. M., Janeiro, F. M., Girao, P. S. (2016*).* Uncertainty evaluation of multivariate quantities: A case study on electrical impedance. *Measurement*, 78, 397–411.